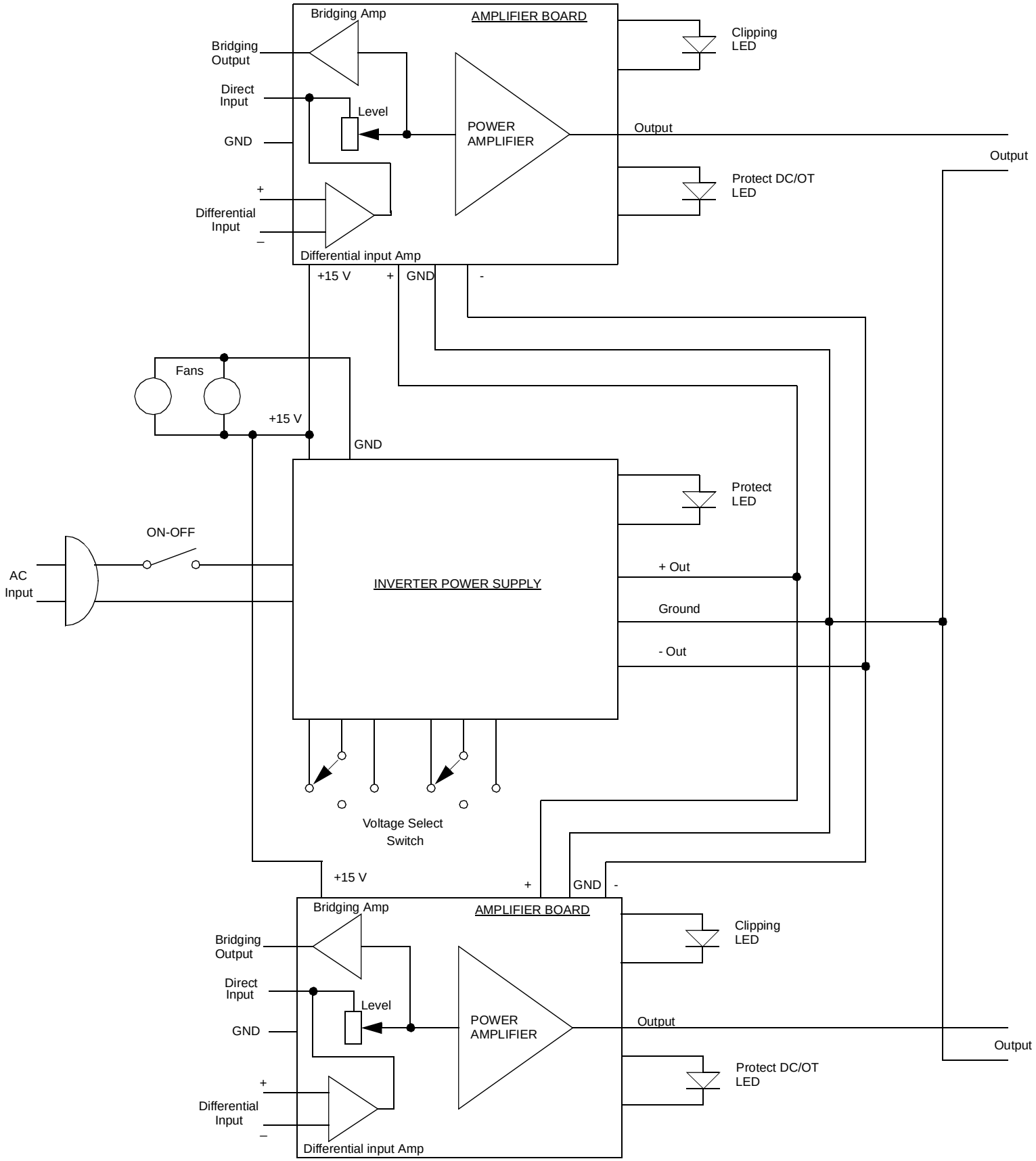

Figure 3: Block Diagram