# AIR TIGHT

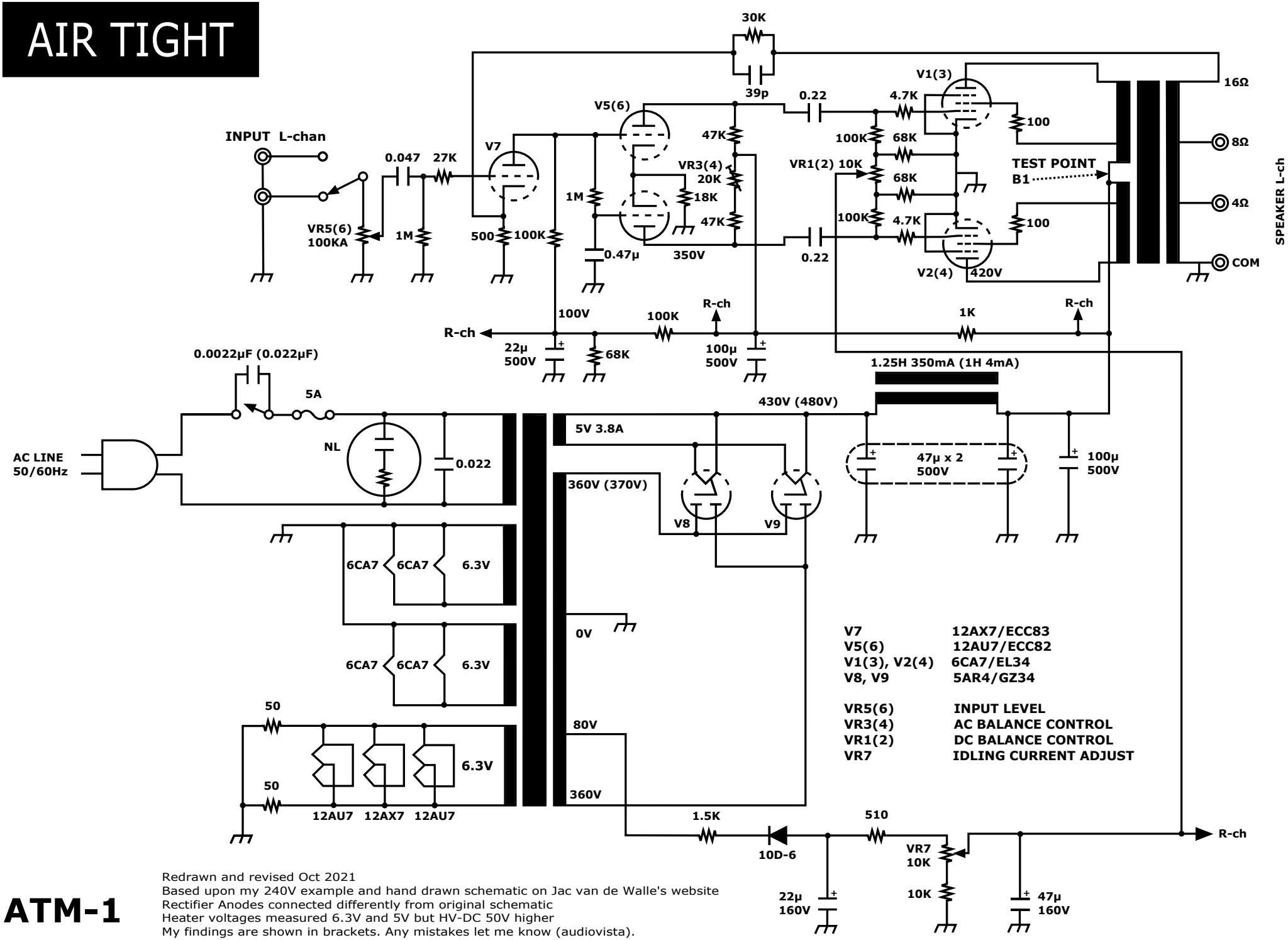


**ATM-1**

Redrawn and revised Oct 2021
Based upon my 240V example and hand drawn schematic on Jac van de Walle's website
Rectifier Anodes connected differently from original schematic
Heater voltages measured 6.3V and 5V but HV-DC 50V higher
My findings are shown in brackets. Any mistakes let me know (audiovista).