Audio Note
Conqueror circuit.

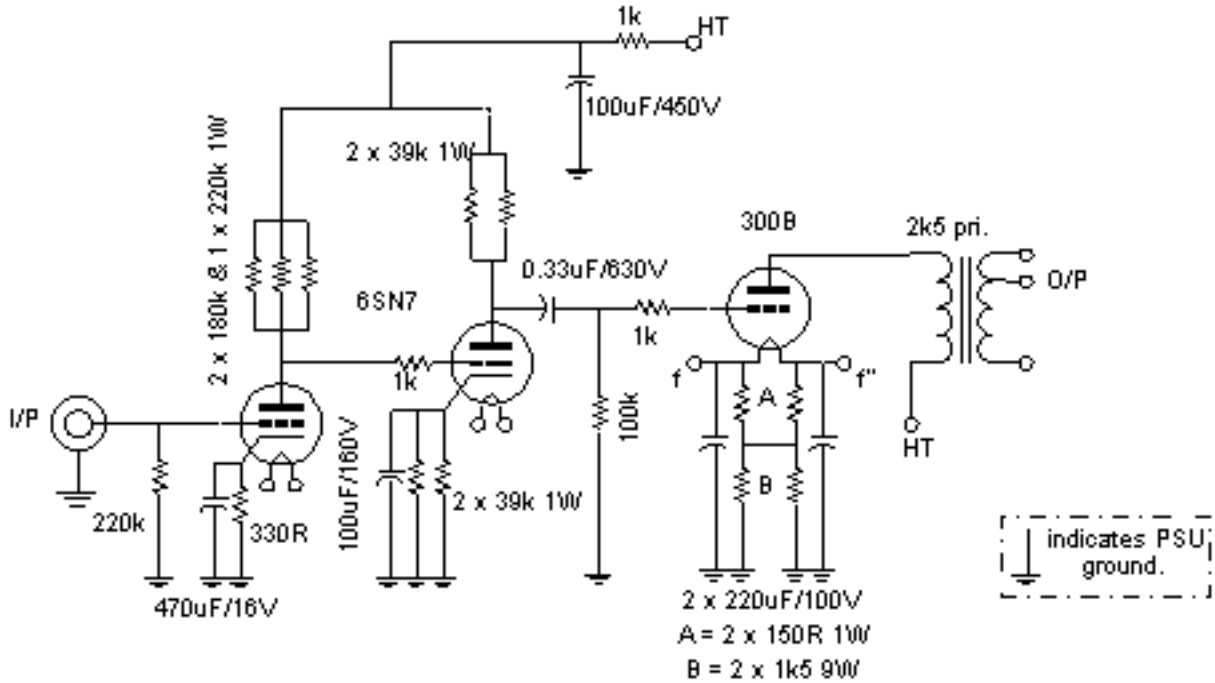

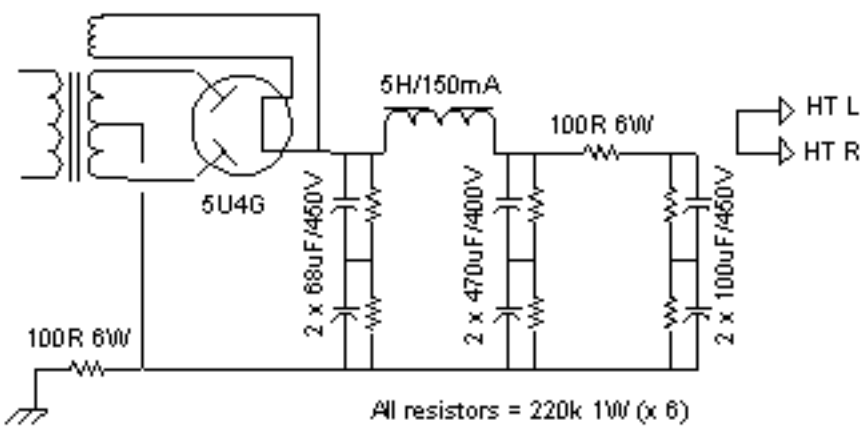

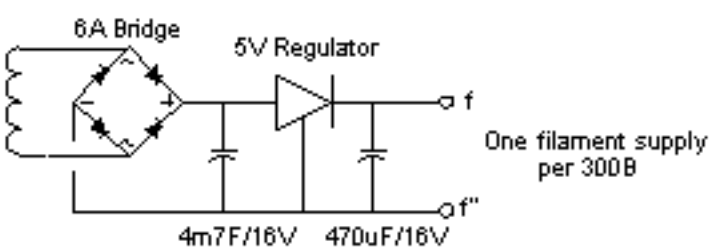

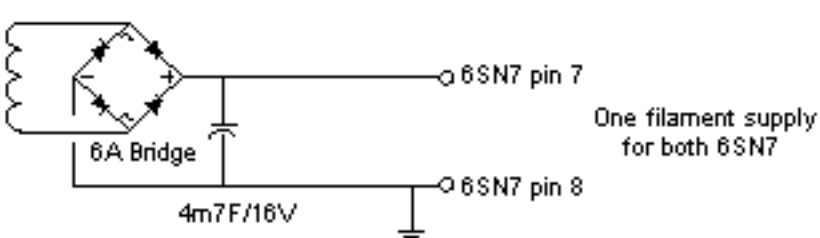

One audio channel only shown - other channel same. Stereo PSU.