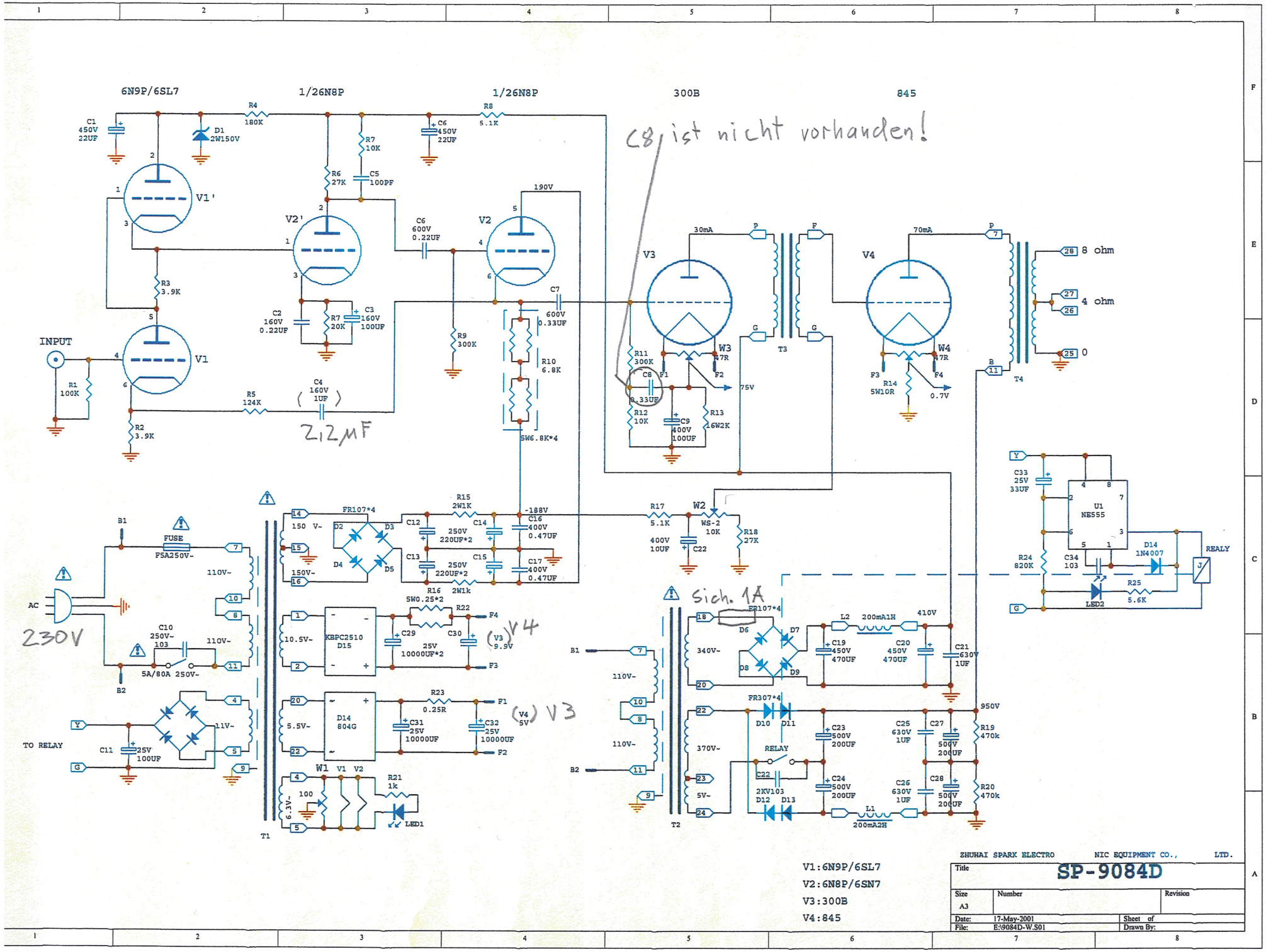

V1:6N9P/6SL7
V2:6N8P/6SN7
V3:300B
V4:845

ZHUHAI SPARK ELECTRO NIC EQUIPMENT CO., LTD.

Title	SP-9084D
Size	A3
Number	
Revision	
Date:	17-May-2001
Sheet of	
File:	E:\9084D-W.S01
Drawn By:	