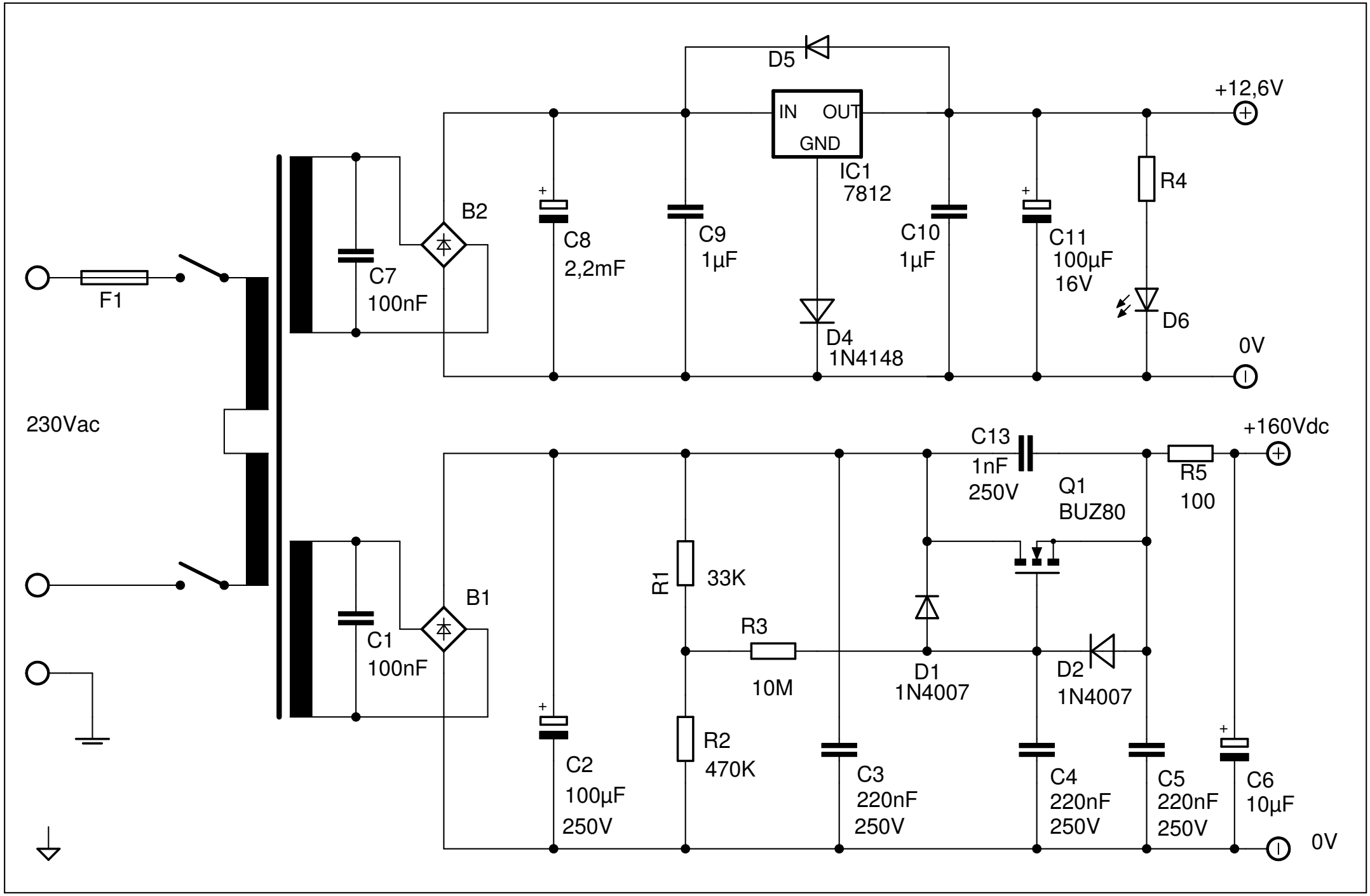

02/03/2018 08:44:12 f=1.80 F:__Program Files Bis\CAD\Eagle 5.10\Schematics\Sound Warmer\SCH-SW-Alimentations-ed4.sch (Sheet: 1/1)