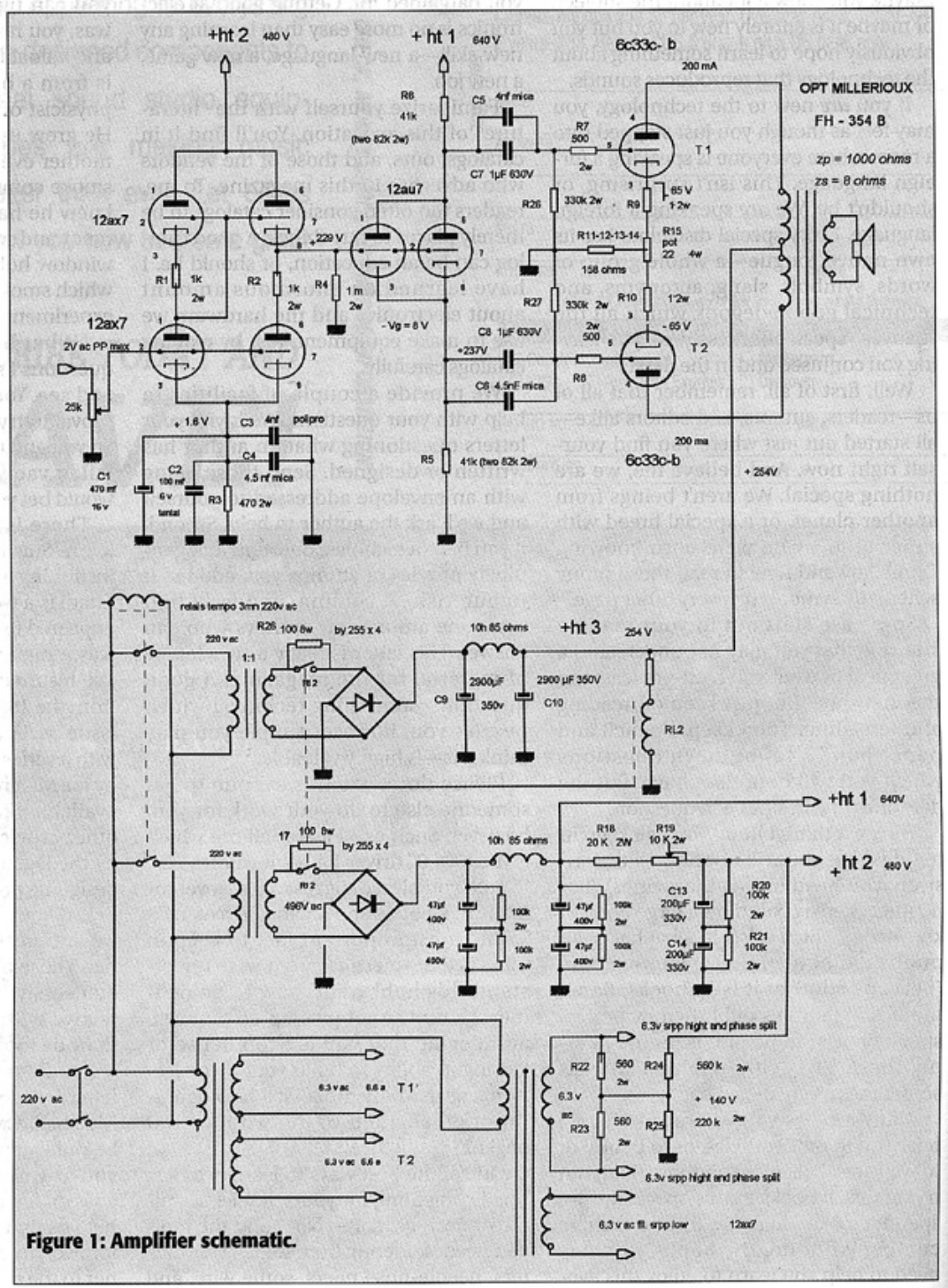

Figure 1: Amplifier schematic.